Space General

Chest of Drawers With 5 Drawers

ASSEMBLY INSTRUCTION

Ensure all screws remain loose until assembly is fully completed.
Caution: Keep all screws loosened until the entire assembly process is finished.

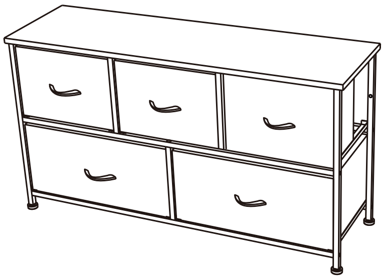

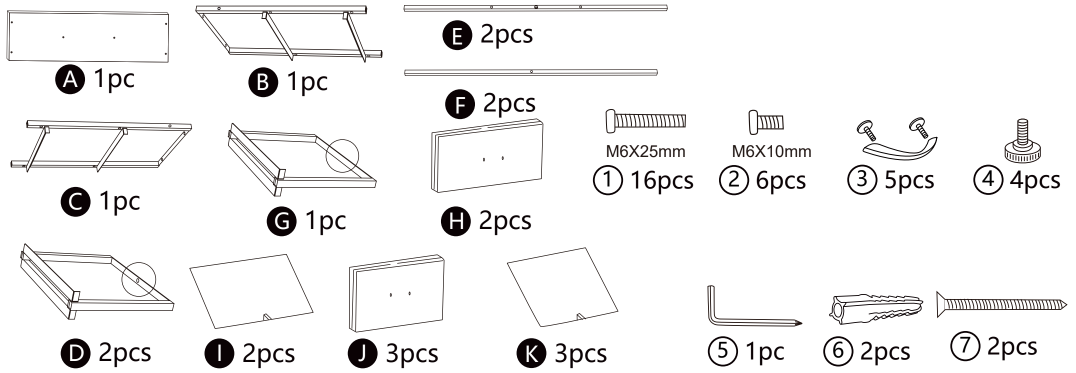
A 1pc
B 1pc
C 1pc
D 2pcs
E 2pcs
F 2pcs
G 1pc
H 2pcs
I 2pcs
J 3pcs
K 3pcs
M6X25mm
① 16pcs
M6X10mm
② 6pcs
③ 5pcs
④ 4pcs
⑤ 1pc
⑥ 2pcs
⑦ 2pcs

1

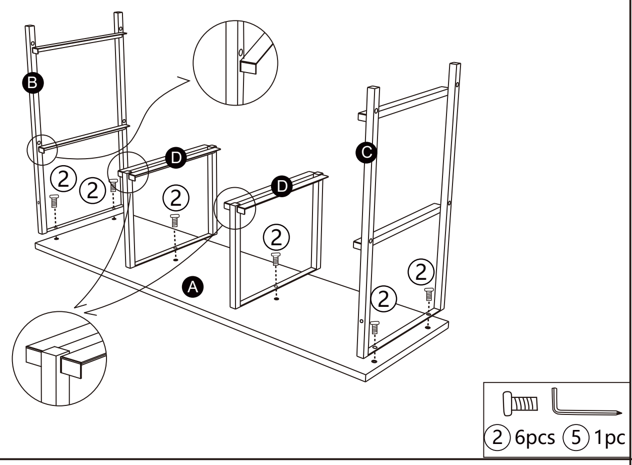
B
D
D
C
A
②
②
②
②
②
②
② 6pcs
⑤ 1pc

2

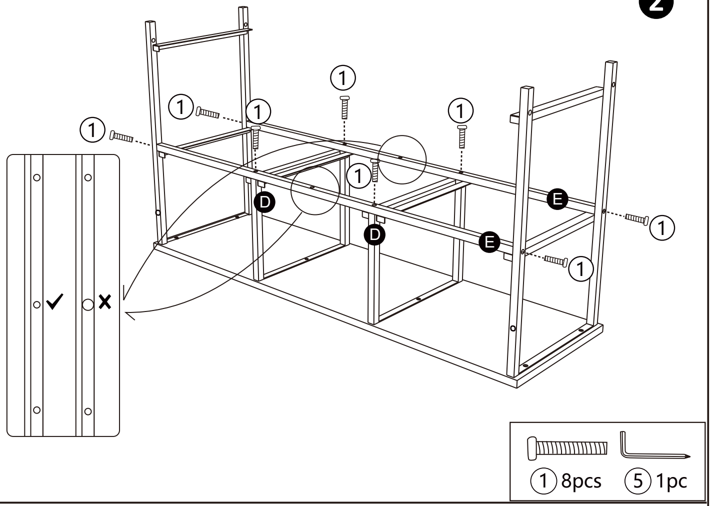
①
①
①
①
①
①
①
①
D
D
E
E
✓
×
① 8pcs
⑤ 1pc

3

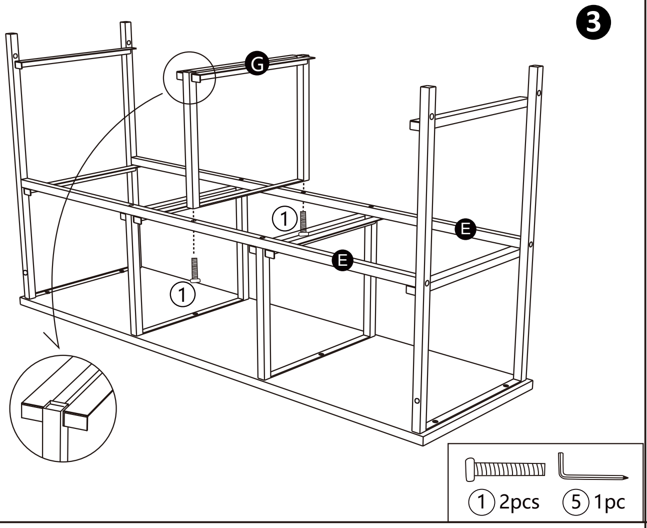
G
E
E
①
①
① 2pcs
⑤ 1pc

4

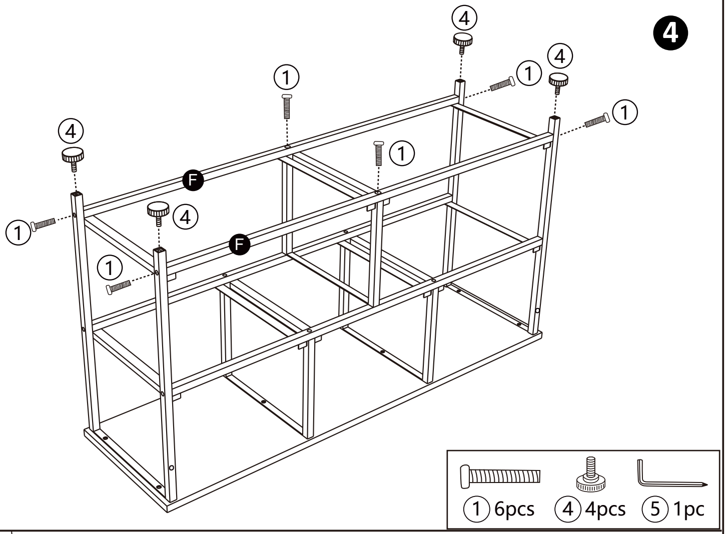
④
④
④
④
①
①
①
①
①
①
F
F
① 6pcs
④ 4pcs
⑤ 1pc

5

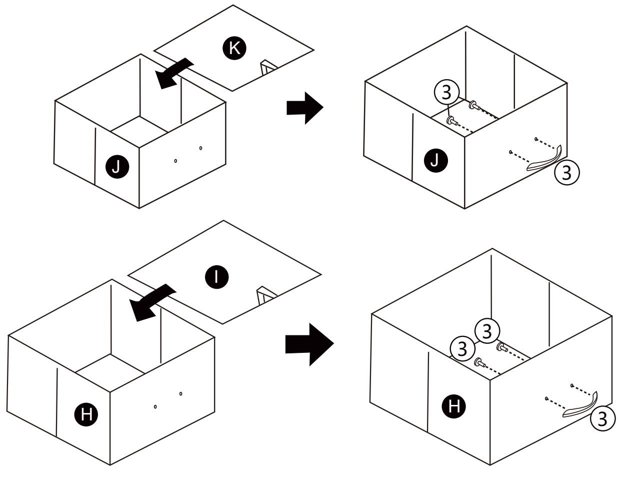
K
J
J
③
③
I
H
H
③
③
③

6

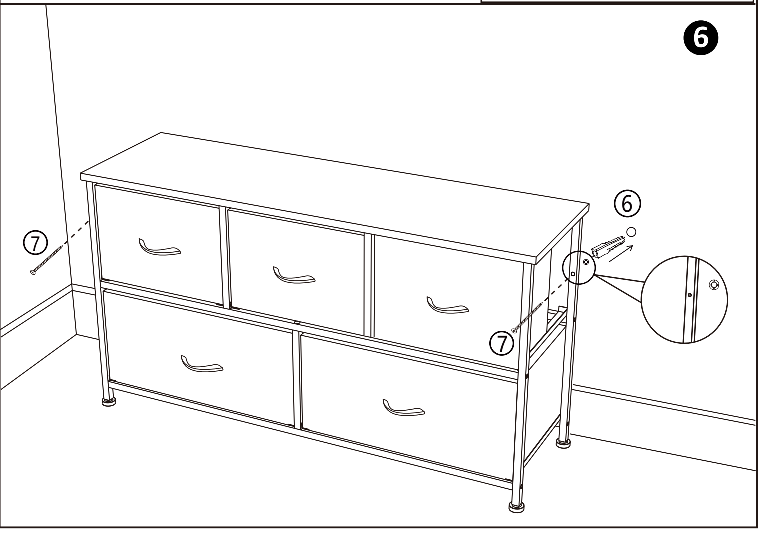

www.spacegeneral.co.nz